SA vz. 58

RIFLE

Fire Control Unit **Included**
Unique design
Metal body and stock
Metal outer barrel
High quality inner parts

READ ALL INSTRUCTIONS BEFORE USE!

- **FOR ADULT USE ONLY. NOT TO BE OPERATED BY MINORS UNDER THE AGE OF 18.**
- NEVER MODIFY OR ALTER YOUR AIRSOFT GUN. Attempts to modify the airsoft gun in any way could make your airsoft gun unsafe to use, cause serious injury or death, and will void the warranty.
- Misuse of Airsoft Guns is dangerous and can cause serious injury or death. Always treat an Airsoft gun with the same respect you would towards a real firearm.

SAFETY CONSIDERATIONS

- NEVER look into the gun's muzzle.
- NEVER point the Airsoft gun at anything you do not intend to shoot.
- NEVER shoot at targets that may cause the BB to bounce off, such as hard surface that could produce a ricochet.
- ALWAYS ensure the operator and everyone nearby are wearing appropriate eye protection.
- ALWAYS ensure the fire-selector is on "SAFE" until you are ready to shoot.
- ONLY shoot the airsoft gun in designated area, towards a safe direction, using a sufficient backstop.

GENERAL PRECAUTIONS

- This merchandise does not contain any internal components compatible or interchangeable with a real firearm.
- This merchandise cannot accept firing components from a real firearm, nor be able to chamber / fire real ammunition.
- This merchandise Is designed to function solely with 6mm airsoft ammunition. ONLY use high-quality precision plastic BBs designed for 6mm Airsoft guns.
- NEVER reuse a BB that is dirty, has been shot from the gun, or otherwise deformed. Use of contaminated or imperfect BBs could damage your gun.
- ALWAYS transport Airsoft guns in it's original box or an appropriate gun case. NEVER carry the gun in plain sight.
- ALWAYS store the airsoft gun unloaded, and out of reach by children.
- Using unauthorized repair centers or modifying the function of your airsoft gun in any way may be unsafe and will void your warranty.
- The manufacturer, distributors, and retailers are not liable for any malfunction, accidents, injuries or repair cost resulting from misuse, or by disassembly and modification of the airsoft gun.

WARNING

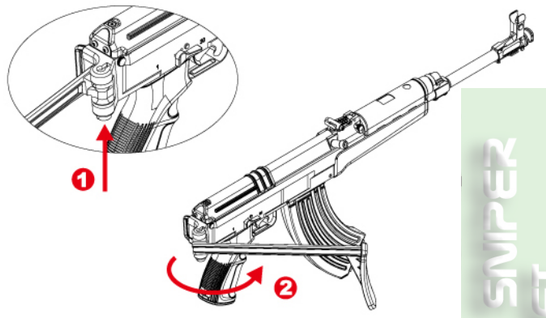

Folding stock

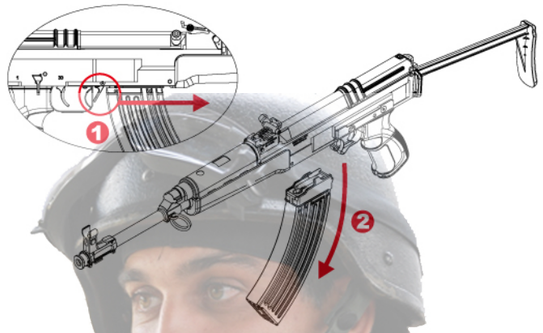

Simple magazine removing

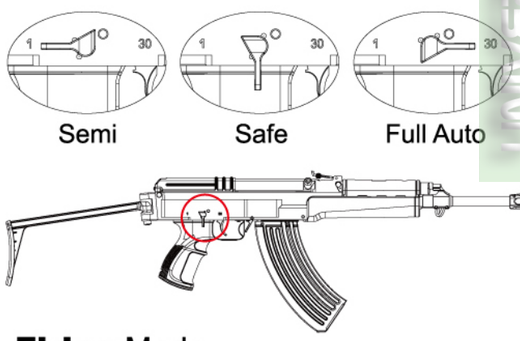

Firing Mode

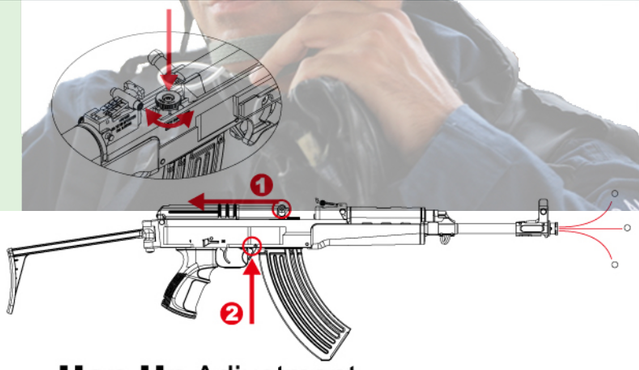

Hop Up Adjustment

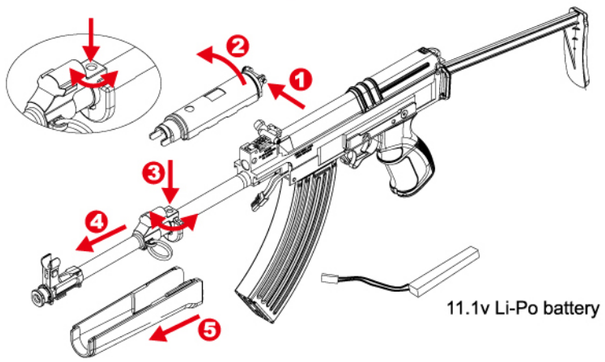

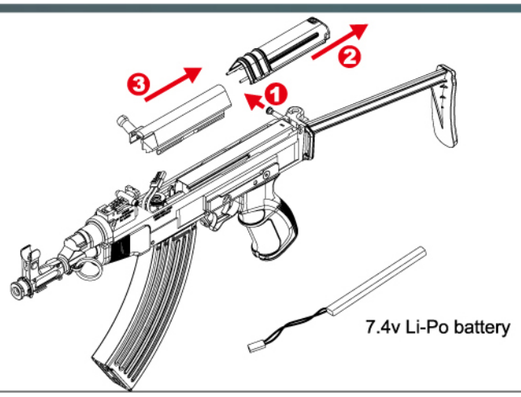

Battery Placement

WARNING : When storage the gun or after use, battery must be unplug. Otherwise the battery power will be drained off.

SA 58 COMPACT

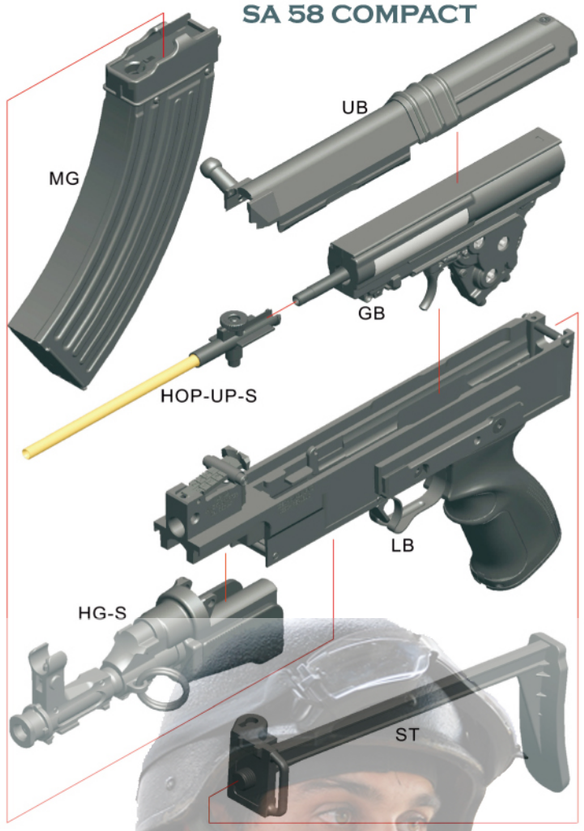

SA 58 CARBINE

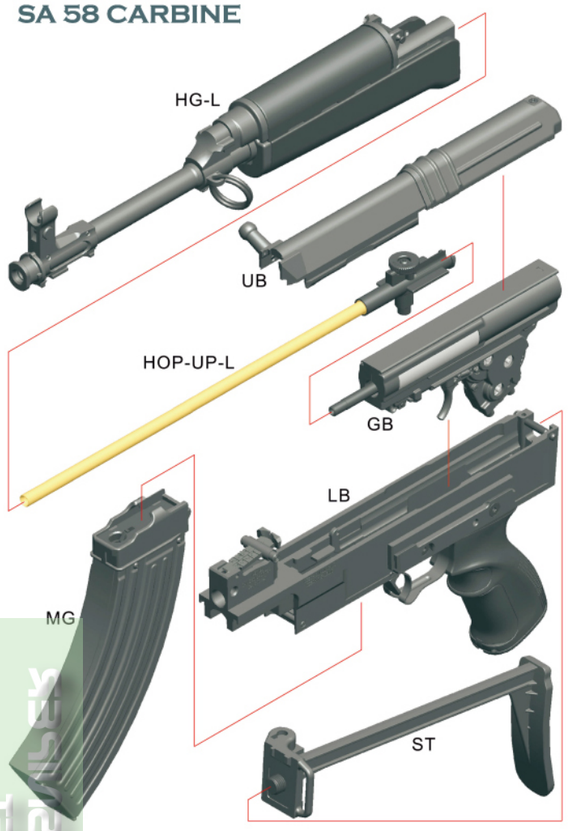

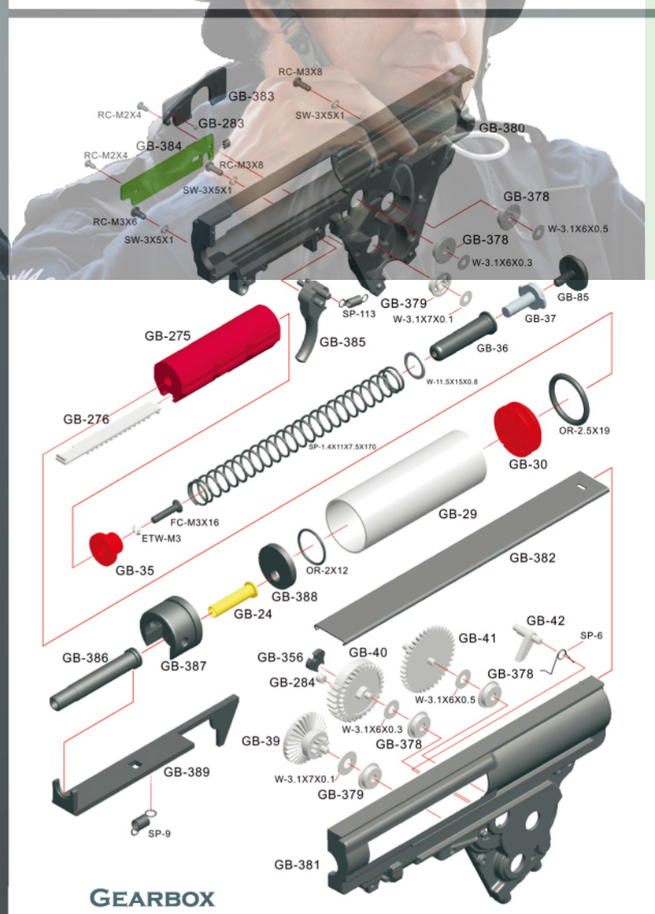

GEARBOX

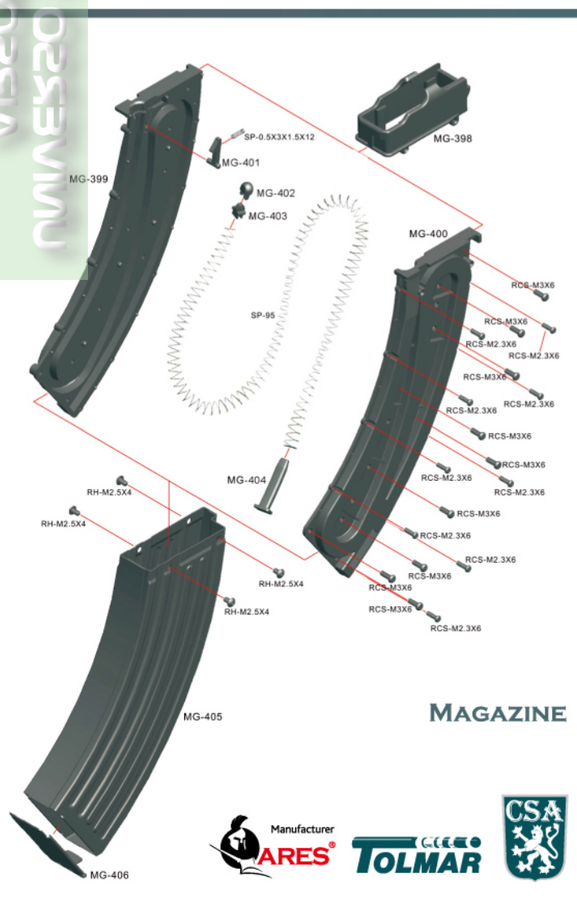

MAGAZINE

Manufacturer ARES TOLMAR CSA