MSR-WR TACTICAL CASE

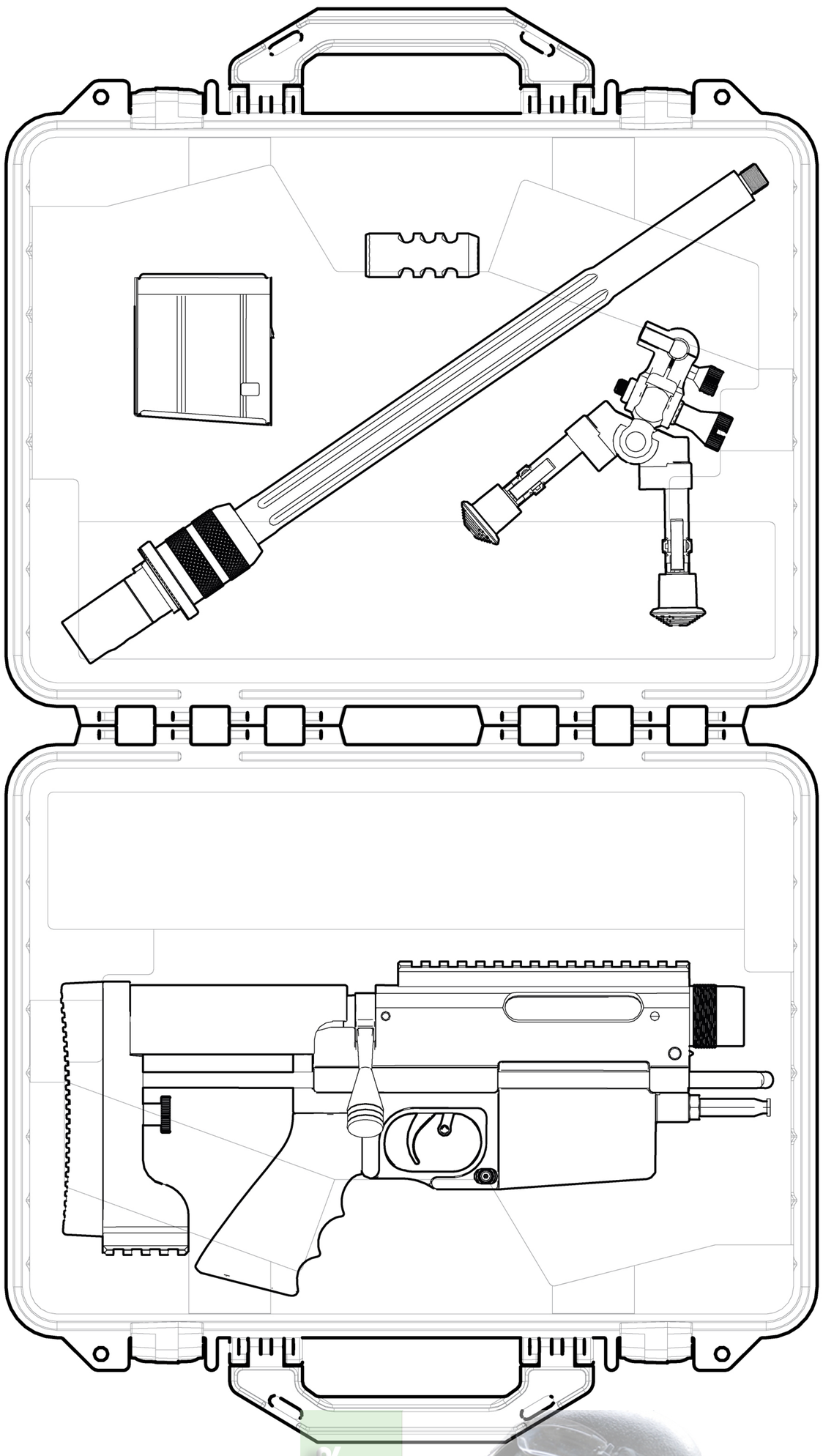

MSR-WR INSTALL INSTRUCTION

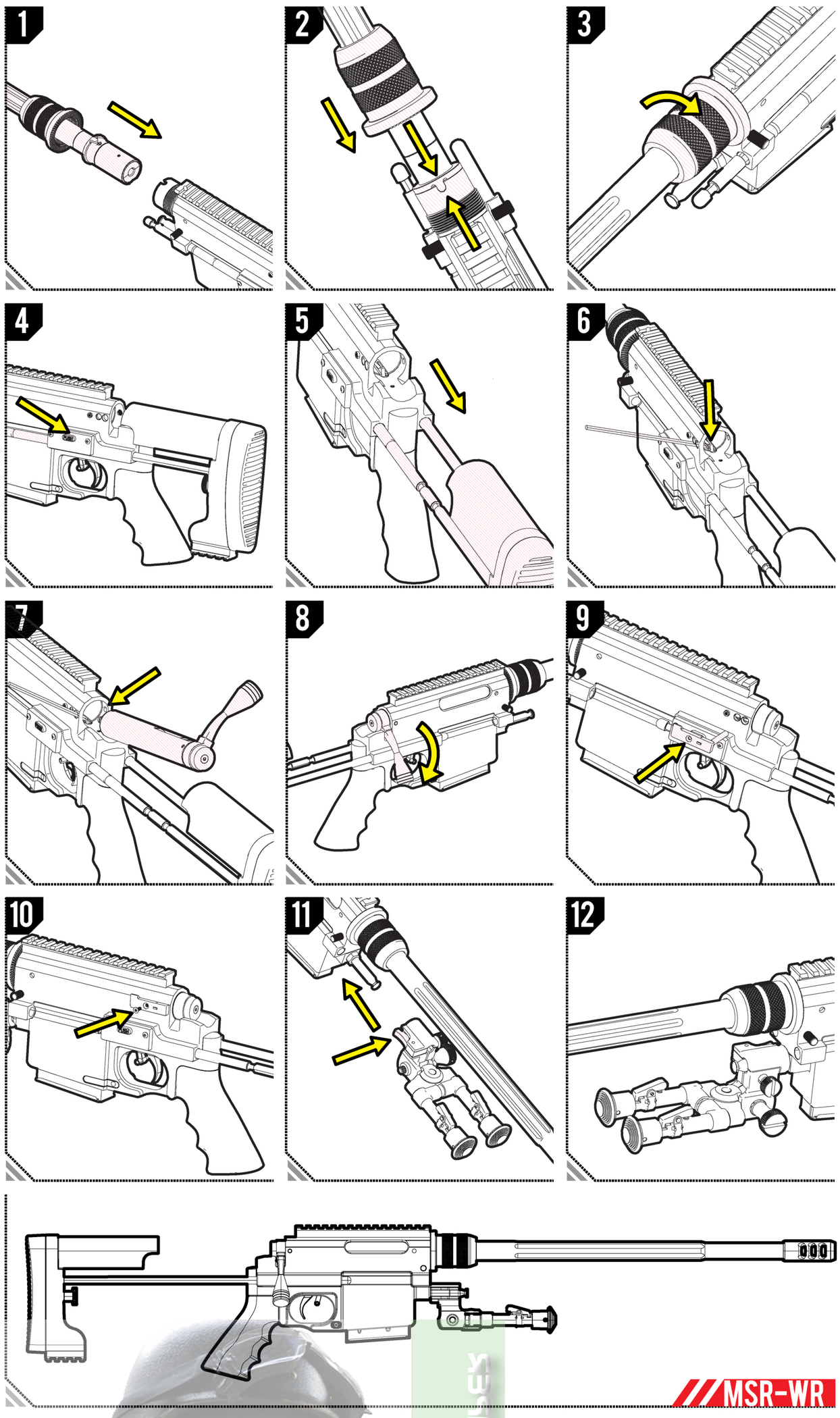

LOADING MAGAZINE

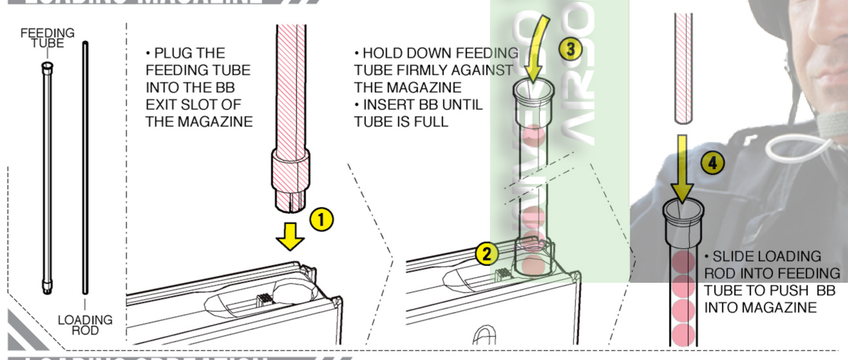

INSERT/RELEASE MAGAZINE

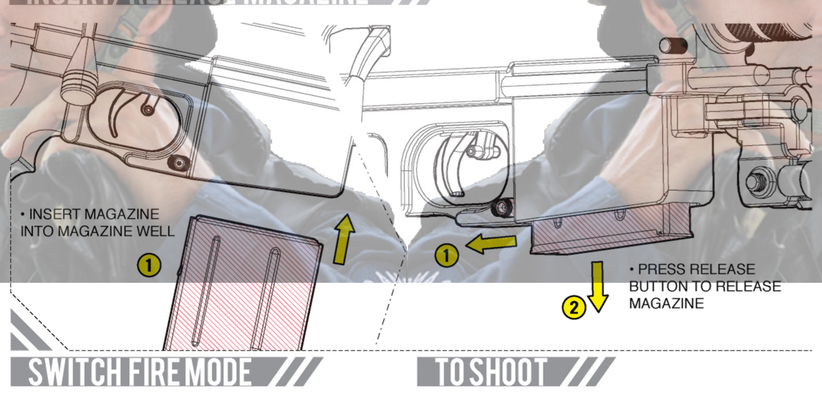

PRODUCT FEATURES

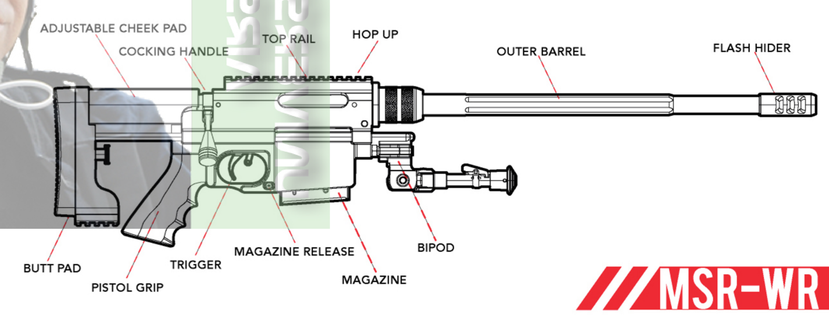

LOADING OPREATION

• LIFT THE COCKING HANDLE UP
• PULL COCKING HANDLE BACKWARD
• PUSH BOLT BACK TO ITS ORIGINAL POSITION
• PUSH THE COCKING HANDLE BACK DOWN

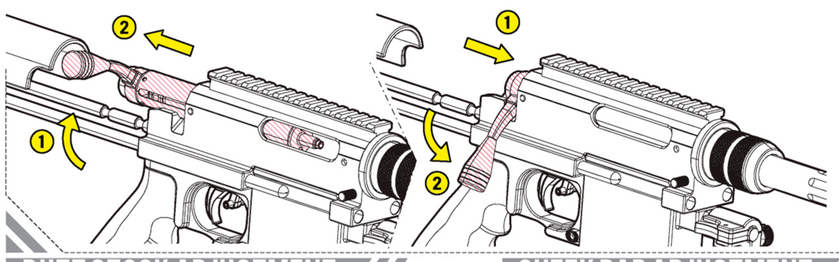

SWITCH FIRE MODE

SAFE MODE: PUSH SWITCH FORWARD
SEMI AUTO MODE: PULL SWITCH BACKWARD

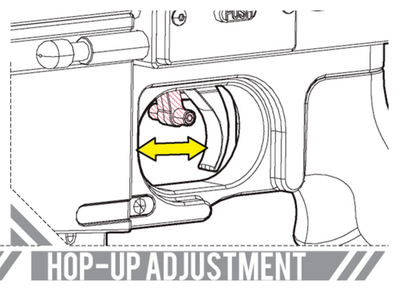

TO SHOOT

• PULL THE TRIGGER TO SHOOT

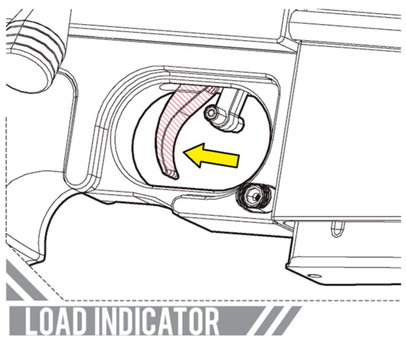

SPECIFICATIONS

POWER SOURCE :	SPRING BOLT ACTION
LENGTH :	815-960mm
WEIGHT :	3820g
MAGAZINE CAPACITY :	45 rounds
FIRE MODE :	SAFE / SINGLE
MATERIAL :	ALUMINIUM
HOP-UP :	ADJUSTABLE
VELOCITY / ENERGY : (Based on 0.20g BB)	±430 FPS / <2 JOULES

BUTT STOCK ADJUSTMENT

• PRESS LEVER TO ADJUST POSITION

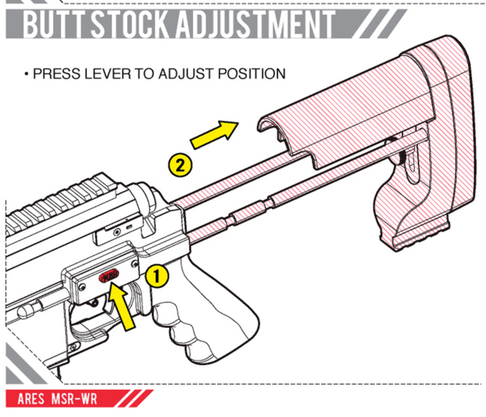

CHEEK PAD ADJUSTMENT

• ROTAE LEVER TO ADJUST POSITION

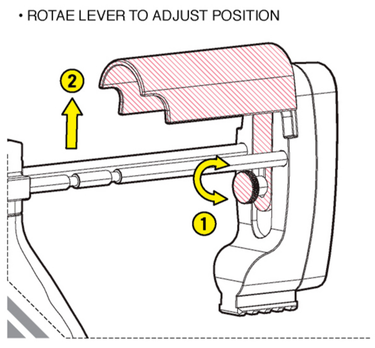

HOP-UP ADJUSTMENT

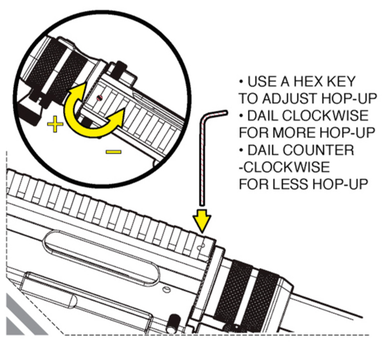

LOAD INDICATOR

LOAD INDICAOT ON
AIRSOFT RIFLE LOADED

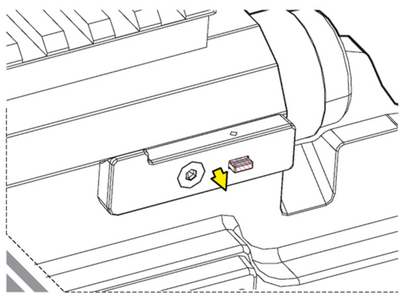

SAFETY INSTRUCTIONS

READ ALL INSTRUCTIONS BEFORE USE!

- **FOR ADULT USE ONLY. NOT TO BE OPERATED BY MINORS UNDER THE AGE OF 18.**
- **NEVER MODIFY OR ALTER YOUR AIRSOFT GUN.** Attempts to modify the airsoft gun in any way could make your airsoft gun unsafe to use, cause serious injury or death, and will void the warranty.
- Misuse of Airsoft Guns is dangerous and can cause serious injury or death. Always treat an Airsoft gun with the same respect you would towards a real firearm.

SAFETY CONSIDERATIONS

- **NEVER** look into the gun's muzzle.
- **NEVER** point the Airsoft gun at anything you do not intend to shoot.
- **NEVER** shoot at targets that may cause the BB to bounce off, such as hard surface that could produce a ricochet.
- **ALWAYS** ensure the operator and everyone nearby are wearing appropriate eye protection.
- **ALWAYS** ensure the fire-selector is on "SAFE" until you are ready to shoot.
- **ONLY** shoot the airsoft gun in designated area, towards a safe direction, using a sufficient backstop.

CAUTION

GENERAL PRECAUTIONS

- This merchandise does not contain any internal components compatible or interchangeable with a real firearm.
- This merchandise cannot accept firing components from a real firearm, nor be able to chamber / fire real ammunition.
- This merchandise is designed to function solely with 6mm airsoft ammunition. **ONLY** use high-quality precision plastic BBs designed for 6mm Airsoft guns.
- **NEVER** reuse a BB that is dirty, has been shot from the gun, or otherwise deformed. Use of contaminated or imperfect BBs could damage your gun.
- **ALWAYS** transport Airsoft guns in it's original box or an appropriate gun case. **NEVER** carry the gun in plain sight.
- **ALWAYS** store the airsoft gun unloaded, and out of reach by children.
- Using unauthorized repair centers or modifying the function of your airsoft gun in any way may be unsafe and will void your warranty.
- The manufacturer, distributors, and retailers are not liable for any malfunction, accidents, injuries or repair cost resulting from misuse, or by disassembly and modification of the airsoft gun.

WARNING

CAUTION TO PREVENT BATTERY POWER DRAINAGE, BATTERY MUST BE UNPLUGGED AND STORED SEPARATELY FROM AIRSOFT GUN AFTER USE.

Divisions of Forever Good (Hong Kong) Ltd.

FOR GENERAL ENQUIRY, CONTACT US AT
ARES@ARESAIRSOFT.COM

FOR THE LATEST NEWS AND PRODUCT INFORMATION, VISIT US AT
WWW.ARESAIRSOFT.COM

ARESAIRSOFT
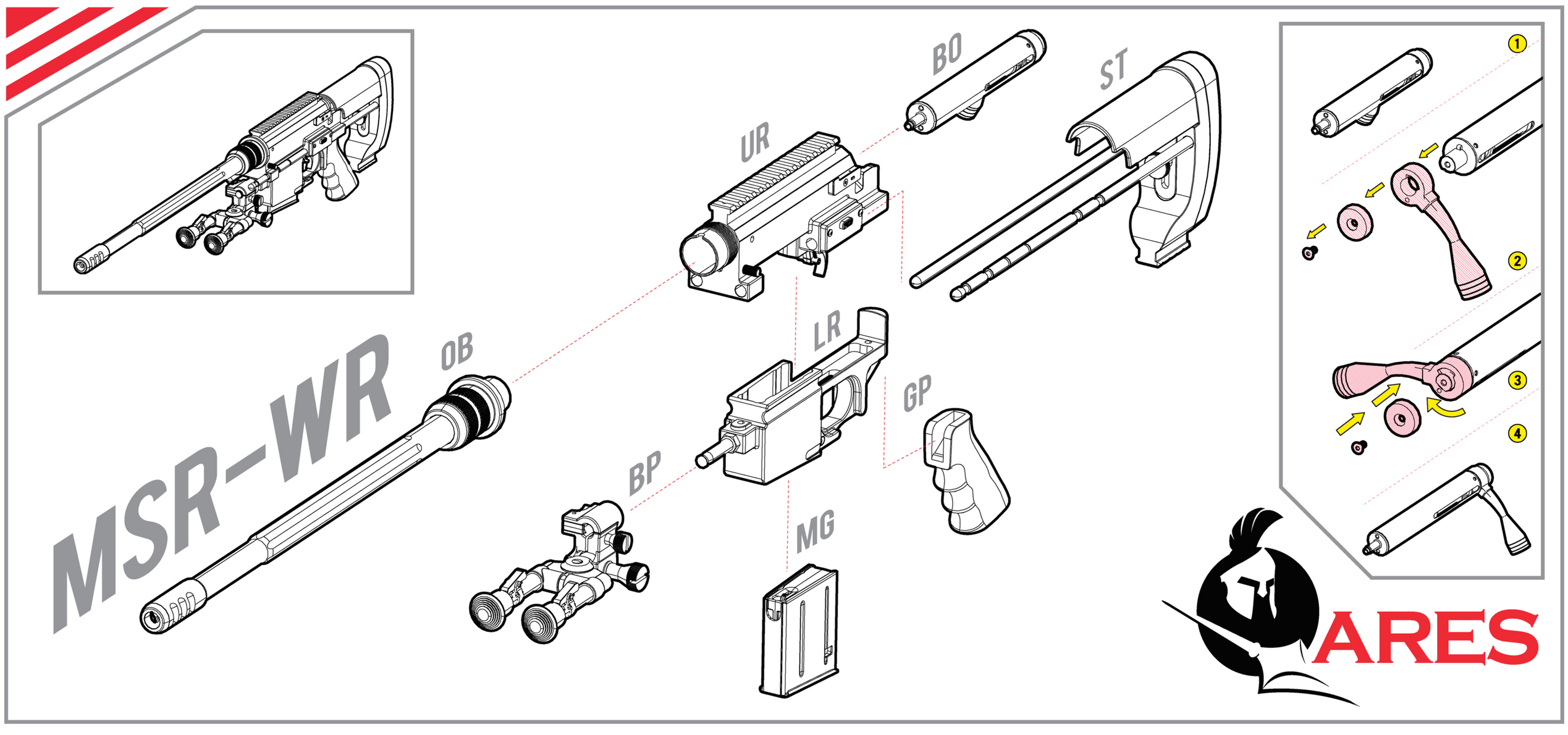
© ARES AIRSOFT. ALL RIGHTS RESERVED